Ice Dam Removal Company CASE STUDY

#18

CLOSE UP OF AN ICE DAM LEAK

A Simple Explanation of Where the Water Goes When Ice Dams Cause Leaks

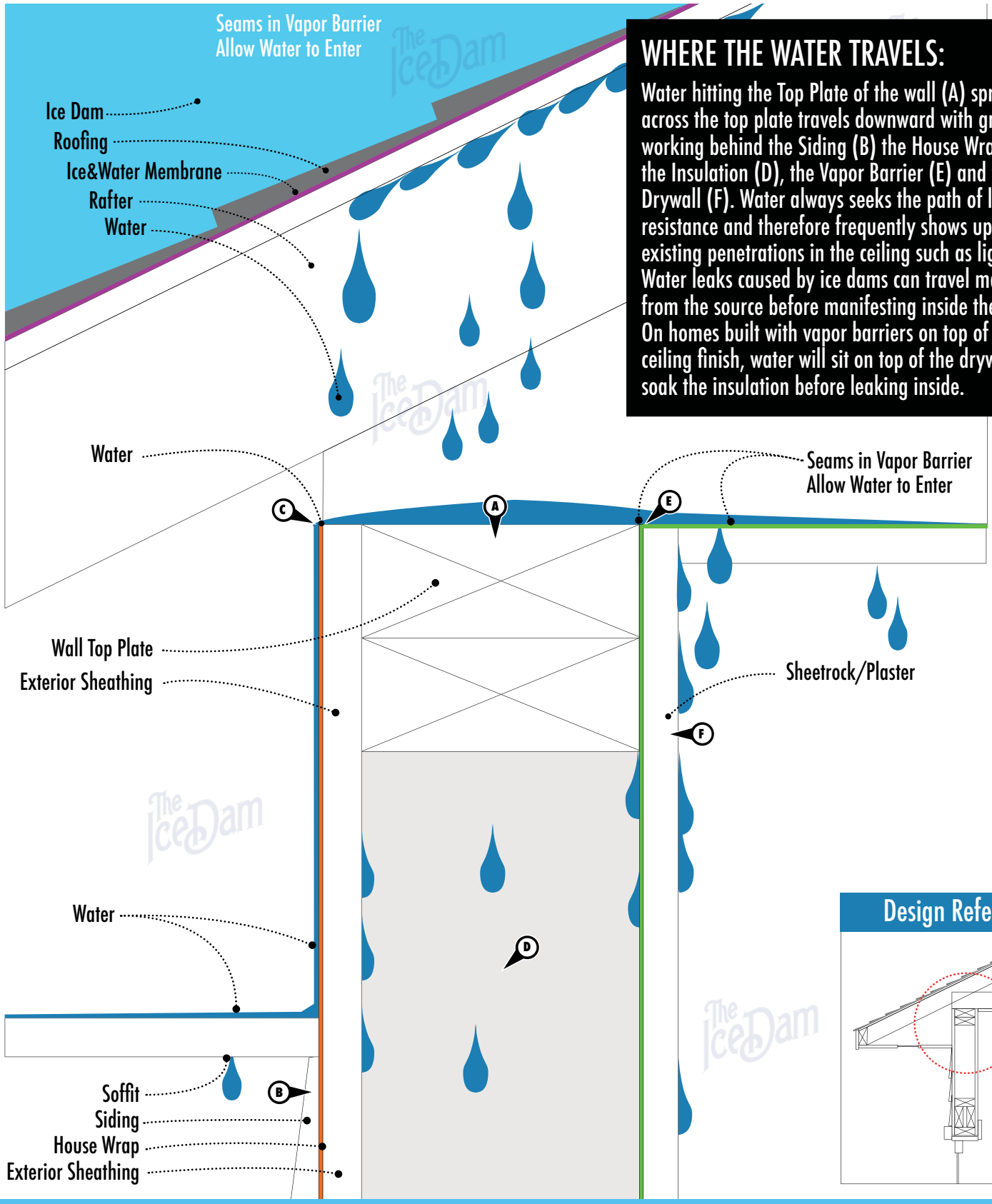

WHERE THE WATER TRAVELS:

Water hitting the Top Plate of the wall (A) spreads out across the top plate travels downward with gravity, working behind the Siding (B) the House Wrap (C), the Insulation (D), the Vapor Barrier (E) and the Drywall (F). Water always seeks the path of least resistance and therefore frequently shows up through existing penetrations in the ceiling such as lights. Water leaks caused by ice dams can travel many feet from the source before manifesting inside the home. On homes built with vapor barriers on top of the ceiling finish, water will sit on top of the drywall and soak the insulation before leaking inside.

Design Reference

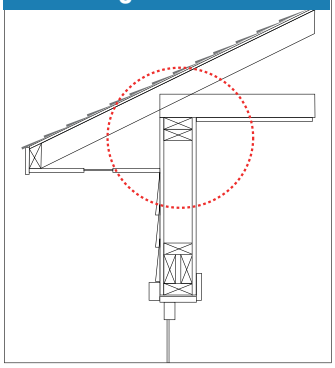

Copyright, 2010, The Ice Dam Company, 1515 South 5th Street, Hopkins, MN 55343, T 952.935.9469, www.icedamcompany.com